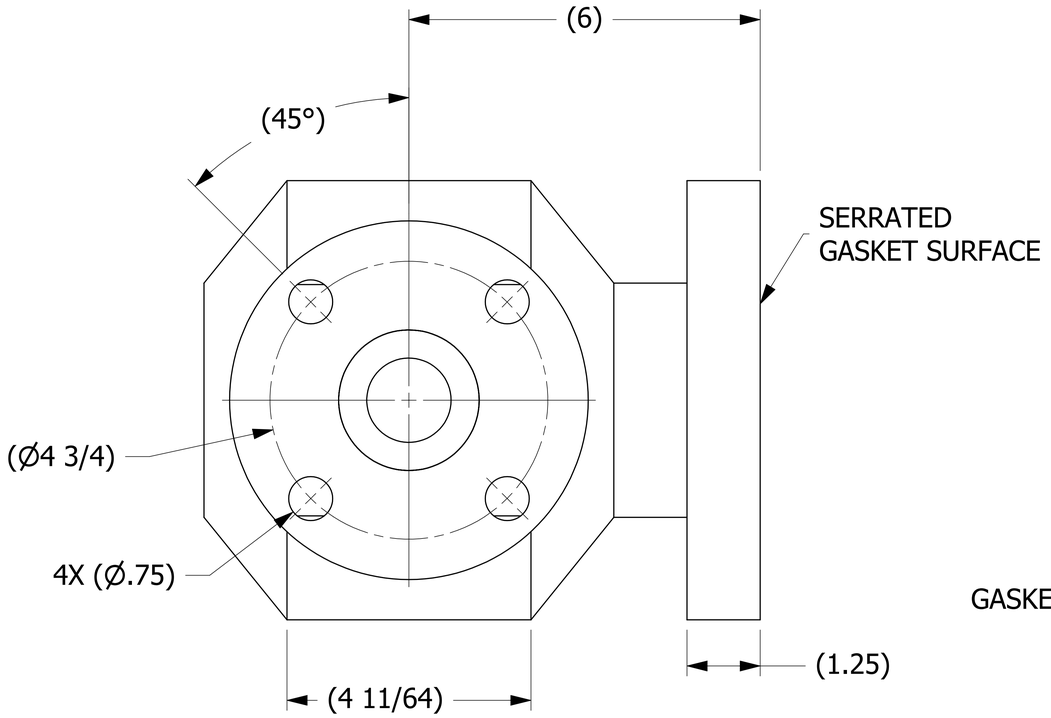

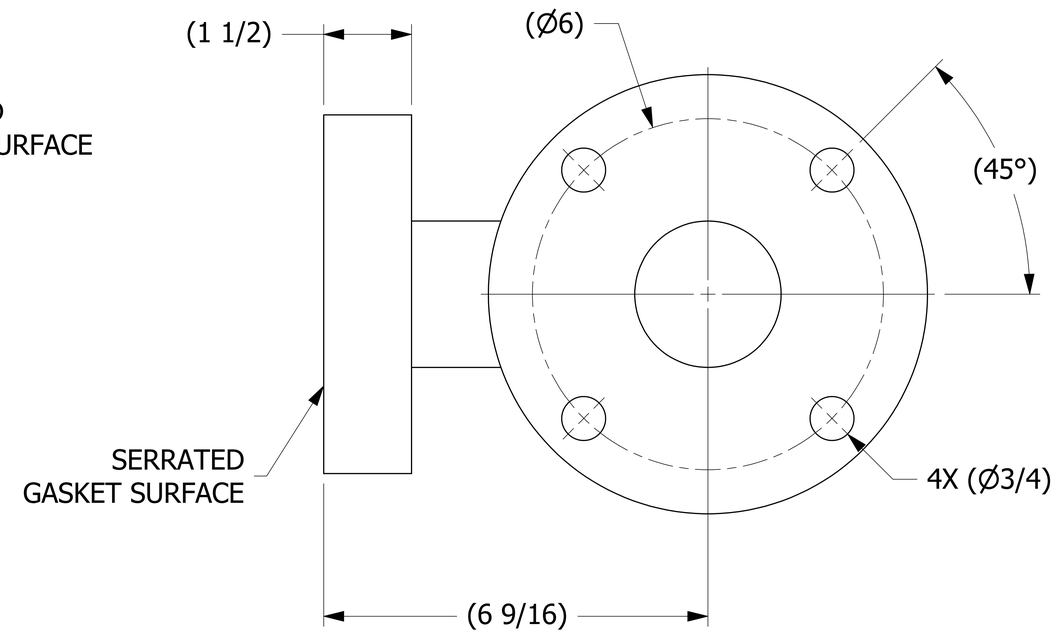

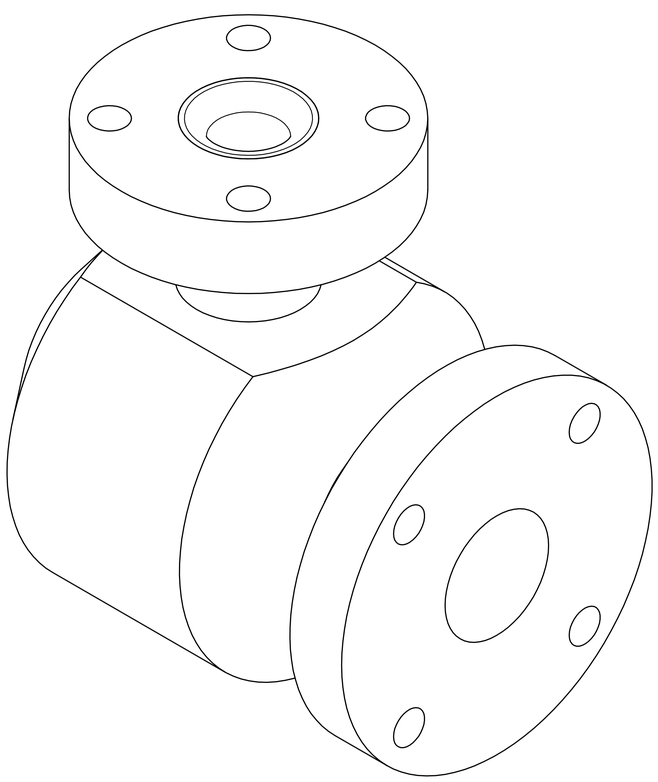

ISOMETRIC VIEW

NOTE:
SOLD TO WORLEY WELDING ONLY.

SALES DRAWING SALES DRAWING

SALES DRAWING SALES DRAWING

REV	BY	DATE	DESCRIPTION
E	GS	12-20-12	UPDATED TITLE BLOCK, DIMS, & LEADER NOTE
D	GDS	7-28-11	ADDED MARKING PRESSURE NOTE
C	VD	09-09-10	REPLACED HS618FL W/ HS2FLGS. REV. NOTES.
B	CHL	1-19-10	REPLACED HS2DTFL2 W/HS618FL
A	PJG	9-28-09	NEW PART ADDED TO SYSTEM

UNLESS OTHERWISE SPECIFIED DIMENSIONAL TOLERANCES
FRACTIONAL: ±1/16
X.XX: ±.03
X.XXX: ±.015
ANGULAR: ±1°
DEBURR ALL SHARP EDGES. ALL MACHINED SURFACES TO HAVE A 125 RMS FINISH UNLESS NOTED OTHERWISE.
THIRD ANGLE PROJECTION

DRAWN BY:	CHL
CHECKED BY:	PJG
PROTOTYPE BY:	CHL
PROTOTYPE DATE:	5/22/2009
APPROVED FOR PRODUCTION BY:	PJG
PRODUCTION DATE:	9/28/2009

SALCO PRODUCTS, INC.

PART NAME: ELBOW 3"X2"X90°

MATERIAL: SALCO PE

PROJECT #: 090428 | SHEET #: 1 OF 1 | SCALE: 1:1

DRAWING #: E26850 | PART #: HS3X2X90PE1

THIS PRINT, PROPERTY OF SALCO PRODUCTS INC, CONTAINS PROPRIETARY INFORMATION AND MUST NOT BE COPIED, REPRODUCED, OR USED DETRIMENTALLY TO OUR INTEREST.